Instructions for use

HOME DELUXE
WIR MACHEN DEIN ZUHAUSE

LAHTI M outdoor barrel sauna

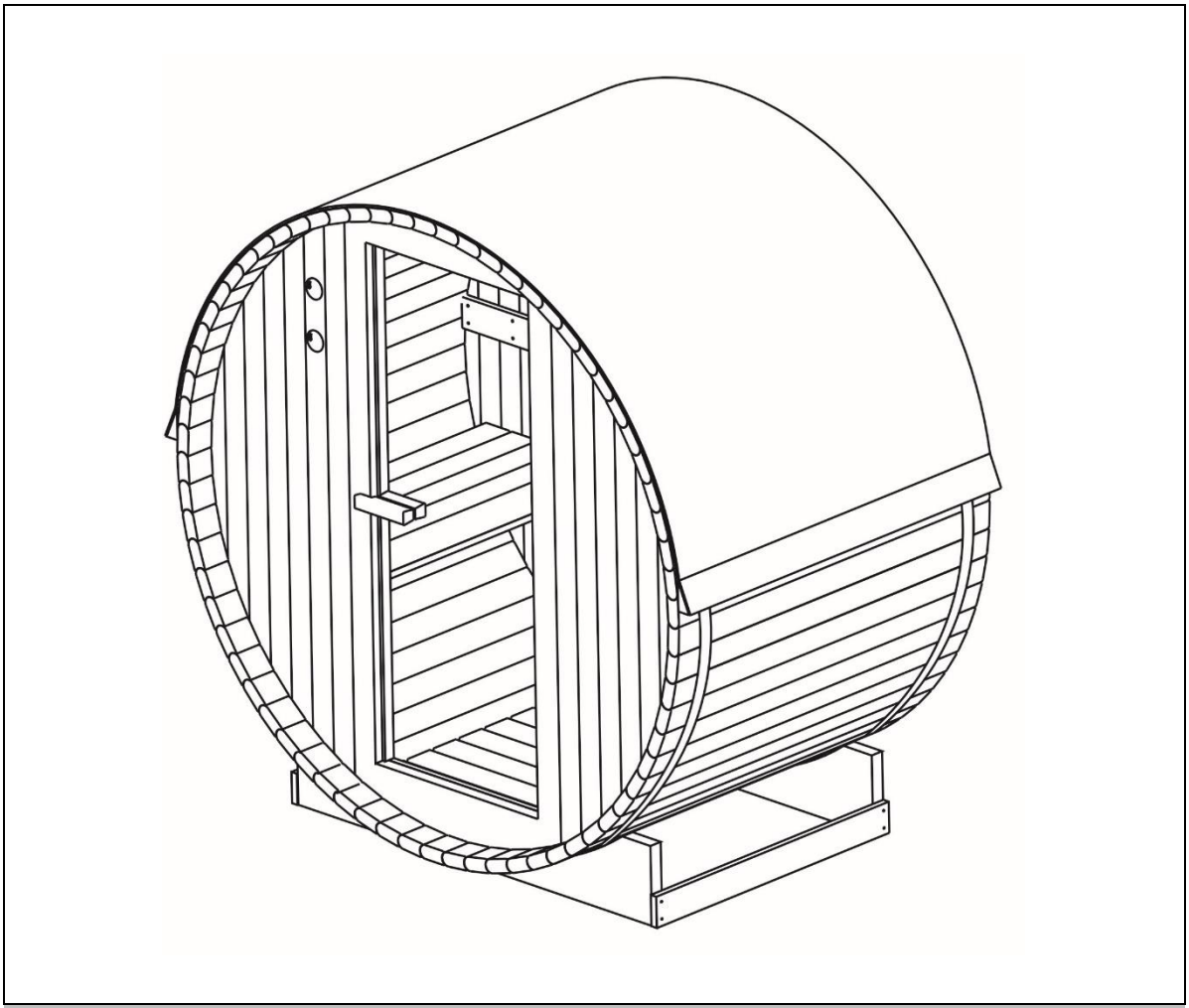

Original instructions for use

Designed in Germany

IMPORTANT:
KEEP FOR FUTURE REFERENCE.
READ CAREFULLY!

Table of contents

1. General information 3
1.1. Product overview....3
1.2. General notes 3
1.3. Guarantee....3
1. Information on the instructions for use 3
1.1. Availability of the instructions for use 3
1.2. Information on the translation....4
1.3. Target groups of the instructions for use....4
1.4. Explanation of symbols....4
1.5. General information on the instructions for use 5
1.6. Intended use....5
1.7. Safety instructions....5
2. Product features....6
2.1. Technical data....6
3. Scope of delivery 7
4. Installing the sauna....10
4.1. Safety instructions....10
4.2. Structure of the product....11
4.3. Sauna heater: Model JM 24
4.4. Safety instructions....24
4.5. Installation and electrical connection 25
5. Application....28
5.1. Safety instructions....28
5.2. Initial commissioning....29
5.3. Operation....29
5.4. Control elements....30
5.5. Sauna stones and sauna infusion 30
5.6. Sauna recommendations....31
6. Troubleshooting 32

7. Maintenance and care 33
8. Dismantling 33
8.1. Safety instructions 33
9. Disposal instructions 33
9.1. General information 33
10. Electrical and electronic equipment - Information for private households 34

Dear customer,

Thank you for choosing a product from **Home Deluxe GmbH.** We hope you enjoy your new LAHTI M outdoor barrel sauna.

The instructions for use support you in the installation, commissioning, operation and maintenance of the product. The instructions for use and the safety instructions must be read carefully and in full. Observe these instructions to avoid hazards.

1. General information

1.1. Product overview

Outdoor barrel sauna LAHTI M | Item ID: 17038 | Variant ID: 32277

1.2. General notes

In order to fulfil our claim, we are constantly improving quality, simplifying installation and operation and adapting the products to customer requirements. Due to these changes, the current version of the instructions for use can be found on our homepage.

The term "product" is used in the operating instructions for the "LAHTI M outdoor barrel sauna", unless individual reference is made to the sauna or the sauna heater.

1.3. Guarantee

The statutory liability for defects and warranty rights apply from the date of purchase.
Home Deluxe GmbH accepts no liability for damage caused by non-compliance with the instructions for use. Complaints arising from improper installation or use are excluded from the warranty. In the event of defects in this product, please contact the manufacturer in writing:

Home Deluxe GmbH
Schanzeweg 2
32312 Lübbecke
Germany
Tel: +49 (0)5743 6181-0
e-mail: info@homedeluxe.de
www.home-deluxe-gmbh.de

If you have any further questions, please contact our customer service team using the contact form.

1. Information on the instructions for use

1.1. Availability of the instructions for use

The instructions for use are part of the product and should be kept complete and in the immediate vicinity of the product.

1.2. Information on the translation

The original instructions for use were written in German. Any other language available is a translation of the German version.

1.3. Target groups of the instructions for use

The instructions for use must be read and observed by every person involved in one of the following activities or uses:

- Unpacking
- Assembly / Installation
- Commissioning / Operation
- Maintenance / inspection / care
- Troubleshooting / repair
- Waste disposal

1.4. Explanation of symbols

Symbol	Explanation of symbols
	**WARNING** The symbol indicates possible dangers that could result in fatal or serious injuries. Before carrying out the corresponding installation or application step, the corresponding note must be read.
	**INFO** The symbol provides important information and indicates material damage. Observe these before carrying out the corresponding installation or application step in order to understand problems and avoid damage.
	**CE labelling** The symbol declares the conformity of the product with the applicable requirements of the European Community. The current declaration of conformity is available on request from Home Deluxe GmbH.
	**Follow the instructions for use** The symbol indicates that the instructions for use must be consulted.
	**Read instructions for use** The symbol indicates that the instructions for use must be read carefully before using the product.
	**Covering prohibited** The symbol indicates that it is forbidden to place anything on the object in question or to cover it.
	**Disposal of electrical and electronic appliances** Electrical and electronic appliances must not be disposed of with household waste!
	**Protection class I** The symbol indicates that all conductive housing parts of the equipment must be connected to the protective conductor system of the fixed electrical installation. It is a protective earthing. In the event of a fault current, the circuit is de-energised by a fuse.

Symbol	Explanation of symbols
	**Alternating current** The symbol indicates that the product is operated with alternating current.

1.5. General information on the instructions for use

The instructions for use refer to the LAHTI M outdoor barrel sauna. They contain important information on installation, operation, maintenance and cleaning. The instructions for use, in particular the safety instructions, must be read carefully before using the product; keep the instructions for use in a safe place. Only use the product as described in these instructions for use to prevent accidental injury or damage. If the product is passed on to a third party, these instructions for use must also be handed over.

1.6. Intended use

The sauna is of high quality, durable and intended or suitable exclusively for private use to a reasonable and customary extent. Furthermore, our product is not intended for commercial use. Commercial use is only permitted with the written authorisation of Home Deluxe GmbH.

The product is a sauna for outdoor use and is intended exclusively for saunas for a maximum of 2 persons.

Only use the product as described in these instructions for use. Any other use is considered improper and may result in damage to property or personal injury. The manufacturer accepts no liability for damage caused by improper or incorrect use.

1.7. Safety instructions

General hazard warnings



- Improper handling can lead to considerable personal injury and damage to property. For this reason, assembly, installation, commissioning, troubleshooting, maintenance and repair work may only be carried out by qualified persons.
- **Only** install the product if the scope of delivery is complete and in perfect condition.
- Ensure that all parts are undamaged and correctly installed. There is a risk of injury if they are not installed correctly. Damaged parts can affect safety and function.
- Only place the product on a safe, level and firm surface.
- Do not make any changes to the product
- Check the fastening at regular intervals.

Danger for children



- Keep children away from packaging materials. There is a risk of suffocation!
- Children must not play in or on the product.
- Do not place the product directly or in the immediate vicinity of a play area.
- Cleaning and user maintenance must not be carried out by children without supervision.

Risk of injury
Improper handling of the product can lead to injuries.



- Do not make any design changes to the product. Any modifications must be authorised by the manufacturer and carried out in accordance with the manufacturer's instructions.
- To avoid burns or electric shocks, ensure that no metal objects or tools come into contact with the heating elements.
- To avoid the risk of electric shock, all installations and corresponding maintenance work must be carried out by a qualified electrician.
- If the mains cable for the power supply is damaged, take the product out of operation until the mains cable is replaced by the manufacturer, its customer service or a qualified electrician.

Risk of damage



- Improper handling of the product can lead to damage.
- Repair and maintenance work on the electrical system may only be carried out by a qualified electrician.

Explosion hazard



- In the event of a fire, inform the fire brigade immediately and make sure that there are no people in the sauna.
- **Caution:** Do not store highly flammable, combustible or explosive substances inside the product. Highly flammable substances can catch fire.

2. Product features

2.1. Technical data

Sauna	
Material	Spruce wood
External dimensions (W x H x D)	195 x 192 x 120 cm
Internal dimensions (W x H x D)	177 x 168 x 93 cm
Wall thickness	38 mm
Seat (W x D)	approx. 90 x 45 cm
Gross weight	350 kg
Sauna operation	max. 2 persons
Opening angle of the door	90°
Door material	ESG (toughened safety glass)

Sauna heater	
Supply voltage	220-240 V AC
Frequency	50-60 Hz
Sauna heater	3.6 kW
Protection class	IPX4[1)]
Depth	250 mm
Width	350 mm
Height	530 mm
Temperature	max. 80 - 100°C
Starting current	16A

1) IPX4: Protection against splash water.

3. Scope of delivery

Check the packaging for external damage on delivery. Furthermore, immediately after unpacking, check that the scope of delivery is complete and that the product and all components are in perfect, undamaged condition. Only assemble the product if the scope of delivery is complete and undamaged.

The LED bulb is not included in the scope of delivery. Please buy an E27 40W LED bulb from a retailer.

Make a note of the serial number of the control box, as this number will be required in the event of a repair or when ordering spare parts.

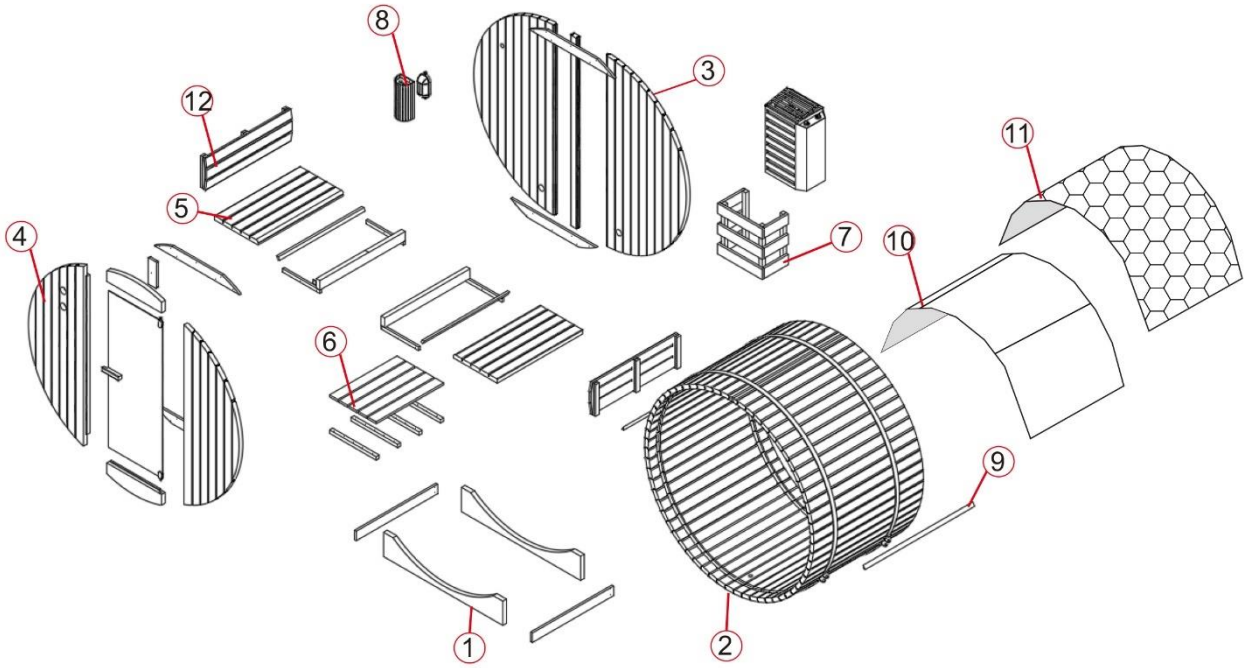

Individual parts of the sauna

1.1		(1306 x 230 x 40 mm) x2	**4.3**		(600 x 163 x 40 mm) x1
1.2		(898 x 90 x 20 mm) x2	**4.4**		(1703 x 613 x 40 mm) x1
2.1	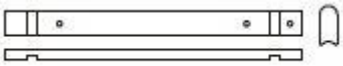	(1200 x 89 x 38 mm) x2	**4.5**		(410 x 33 x 20 mm) x2
2.2	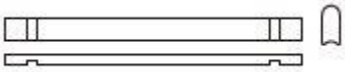	(1200 x 89 x 38 mm) x1	**4.6**		(932 x 90 x 20 mm) x2
2.3	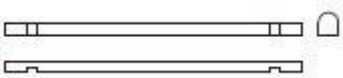	(1200 x 40 x 38 mm) x1	**4.7**		(1485 x 592 x 6 mm) x1
2.4	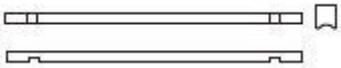	(1200 x 40 x 38 mm) x1	**4.8**	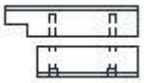	(40 x 40 x 180 mm) x1 (40 x 40 x 135 mm) x1
2.5	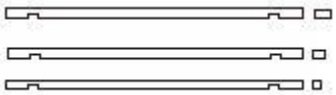	(1200 x 30 x 38 mm) x1 (1200 x 20 x 38 mm) x1 (1200 x 10 x 38 mm) x1	**4.9**	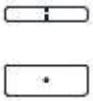	(250 x 90 x 20 mm) x1
3.1	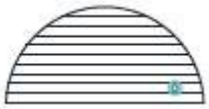	(1805 x 868 x 40 mm) x1	**5.1**		(935 x 475 x 38 mm) x2
3.2	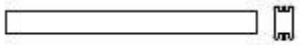	(1806 x 90 x 40 mm) x1	**5.2**	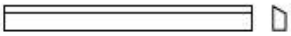	(935 x 38 x 20 mm) x2
3.3		(1805 x 868 x 40 mm) x1	**5.3**	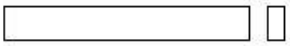	(935 x 90 x 38 mm) x 2
3.4	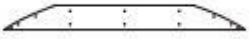	(932 x 90 x 20 mm) x2	**6.1**		(738 x 90 x 20 mm) x5
3.5	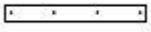	(410 x 33 x 20 mm) x2	**6.2**		(510 x 33 x 33 mm) x4
4.1		(1703 x 603 x 40 mm) x1	**7.1**	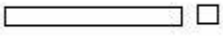	(450 x 33 x 33 mm) x4
4.2		(600 x 163 x 40 mm) x1	**7.2**	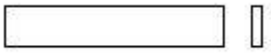	(460 x 90 x 20 mm) x3

7.3	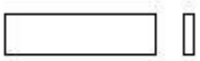	(250 x 90 x 20 mm) x 3	**13**		(140 x 258 x 254 mm) x1
8	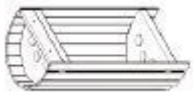	(300 x 142 x 105 mm) x1	**14**		(415 x 90 x 40 mm) x1
9		(1200 x 40 x 20 mm) x2	**15**		(289 x 65 x 38 mm) x1
10	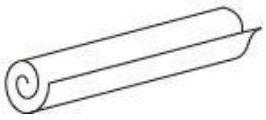	(1000 xx 1200 m) x3	**16**	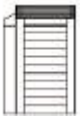	(350 x 250 x 530 mm) x1
11.1		(1010 x 320 mm) x24	**17**		(Φ 100 x 15 mm) x1
11.2	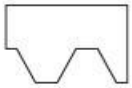	(505 x 320 mm) x24	**18**		(sauna lamp) x1
12	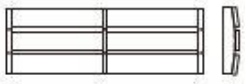	(935 x 300 x 70 mm) x2			

Mounting material

											
Ø4x18	Ø4x40	Ø4x50	Ø4x60	Ø4x70	Ø3*16	Ø4x12	Ø6x60	Ø12x100	30*20*2	Ø20	Ø60
28x	159x	60x	16x	8x	4x	4x	2x	2x	1x	4x	1x

											
Ø58	M12	Ø12/Ø24	Ø12	Ø10.5 x Ø16	60x200 x0,5	M18	Ø60*10	38*25*25			
1x	4x	4x	4x	2x	4x	1x	1x	4x	2x	2x	6x

4. Installing the sauna

Installation site



The installation of the sauna may be regulated by building regulations. Authorisation for installation may be withdrawn by the authorities if the installation conditions are breached.

- Consult the responsible authority before setting up.
- Comply with applicable regulations.
- Install the product on a level, solid surface.
- Maintain a safety distance of at least 2 metres from other structures. This makes installation easier and can save lives in the event of a fire.

Note: After installation, treat the outside of your sauna with a commercially available wood stain and check the coating annually; the coating may need to be renewed.

Note: Check the countersinks and hole diameters of the drill holes to avoid damaging the wood.

4.1. Safety instructions

The following health and safety information must be read carefully.

Risk of injury
Improper handling during installation can lead to injuries



- Your product will be delivered in several parcels. Please make sure that the parcels are opened at the top. Be very careful when opening the parcels as there are fragile parts and glass in the parcels.
- **Only** install the product if the scope of delivery is complete and undamaged.
- Only place the product on a safe, level and firm surface.
- To avoid injury, at least 3 people are required to assemble the product.
- Wear protective clothing such as safety shoes and protective gloves during assembly.
- Keep children away from the assembly site while the product is being assembled. The scope of delivery contains small parts that can be swallowed or cause serious injury. Do not throw sauna stones.
- Do not place the sauna stones between the heating elements.
- Avoid direct pressure on the heating elements when stacking the sauna stones.
- Place the large sauna stones at the bottom when filling the sauna. Make sure that they are not placed too close together so that the air can still circulate.
- Remove broken or damaged stones from the sauna heater.
- Do not place too many sauna stones on the sauna heater.
- Do not place any objects on the sauna stones, the ventilation of the product must be guaranteed.

4.2. Structure of the product

The product is delivered disassembled and requires some effort to assemble. Follow the assembly instructions carefully. If the instructions are not followed, the function and safety of the product cannot be guaranteed.

Tools required

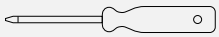	Screwdriver		Measuring tape
	Twist drill	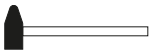	Hammer
	Allen key		Cutter knife
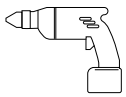	Drilling machine		Stepladder
	Spirit level		Pencil
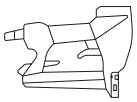	Tacker		

Preparation for setting up the sauna:

Only install the product on a flat, level surface. For better stability and stability, we recommend creating a foundation or similar.

Step 1: Mounting the front wall

- Fit the front panel with the door cut-out first, making sure that the ventilation holes are on the correct side.
- Screw the two holders for the bench seats **4.5** to the front wall**.**
- Screw the two mounts for the base and upper stability **4.6** to the front wall**.**

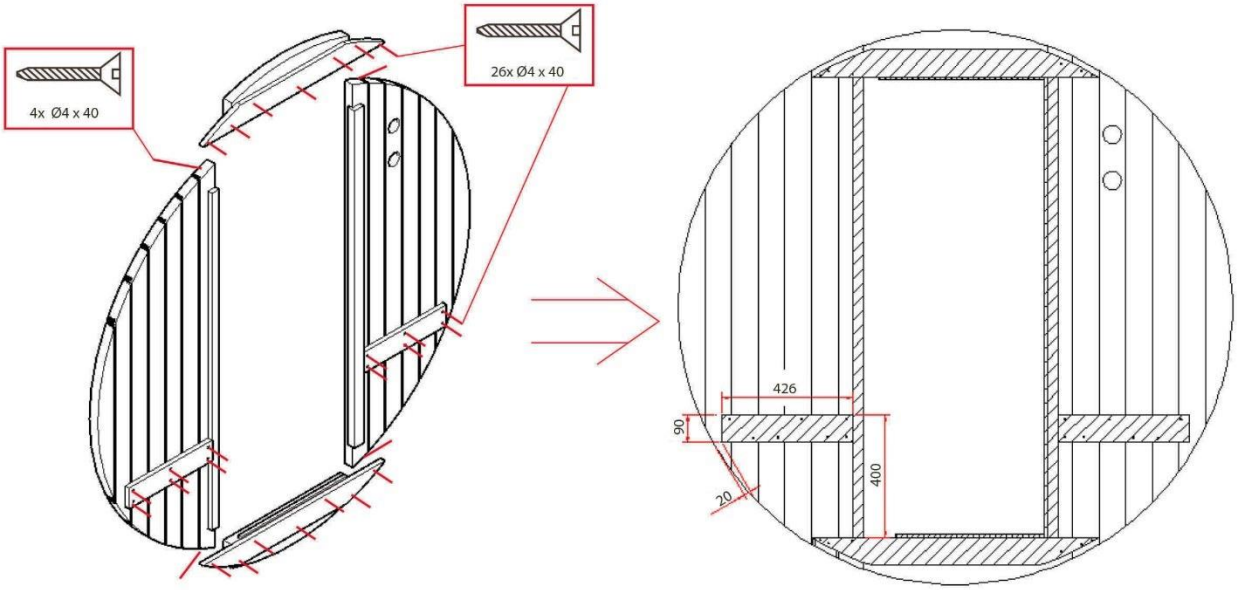

4. 1/4.2/4.3/4.4/4.5/4.6

Step 2: Mounting the back panel

- Pay attention to the position of the two fresh air holes when screwing on the rear panel. The third upper hole is for the ventilation (**see marking above**).
- Fit the two caps for the fresh air supply from the outside in the rear wall.
- Screw the two mounts for the seat benches **3.5** to the inside of the rear wall**.**
- Screw the two mounts for the base and upper stability **3.4** to the rear wall**.**

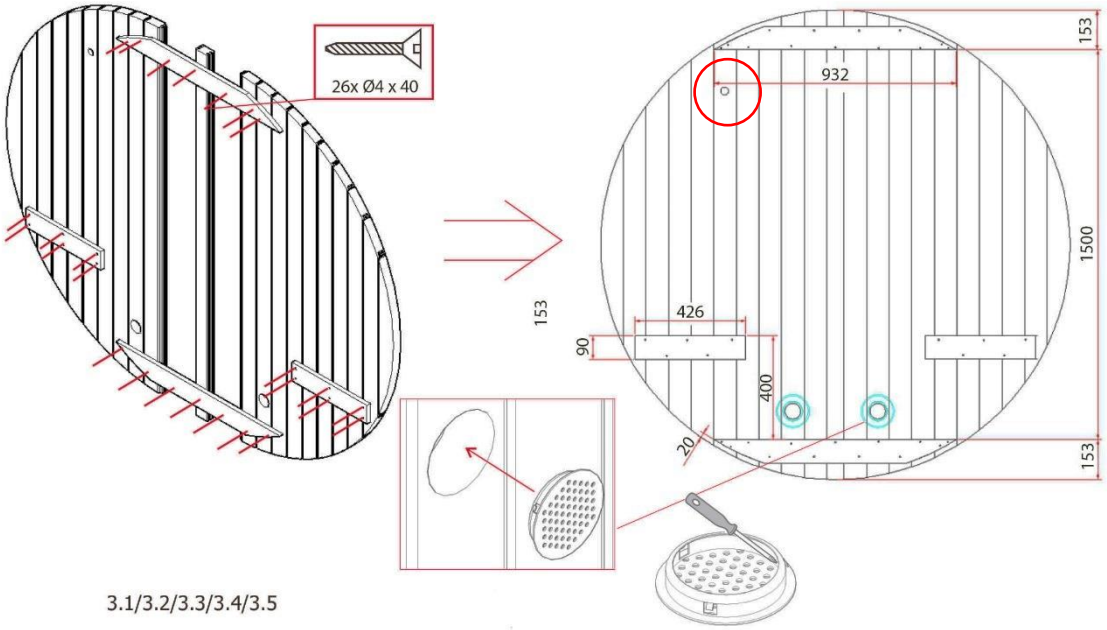

3.1/3.2/3.3/3.4/3.5

Step 3: Assembling the base frame

- Next, screw together the frame, 2x support **1.1** and 2x crossbar **1.2**, with 8x screws, making sure that the frame is square

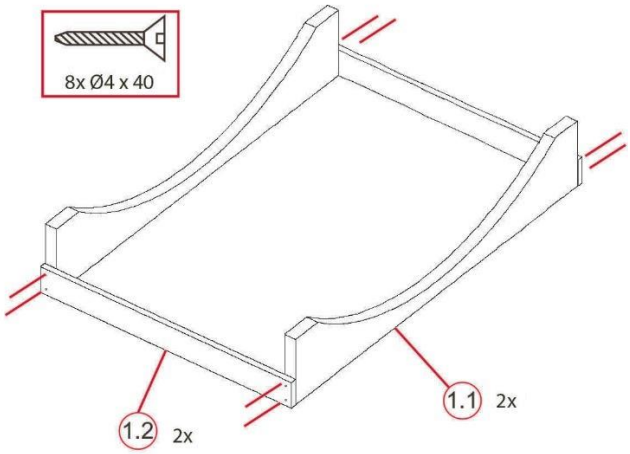

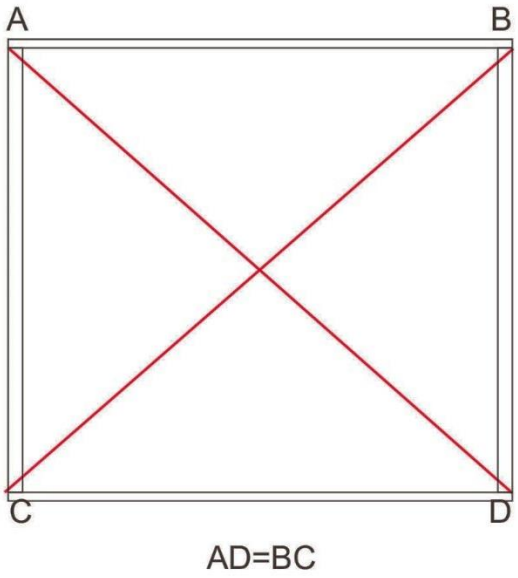

Step 4: Assembling the base, front and rear panels

- Screw the wooden slat **2.1** in the centre of the supports, align the wooden slat evenly, making sure that the two drill holes point towards the rear wall. (**Important**, the recess in the wood must face upwards, this is where the front and rear panels are inserted and mounted).
- Place 12x wooden slats **2.2** evenly, flush and close together on the frame and screw them together as shown.
- Place the front and rear panels in the groove of the wooden slats. Make sure that they are aligned at right angles and perpendicular to each other (e.g. using a spirit level).

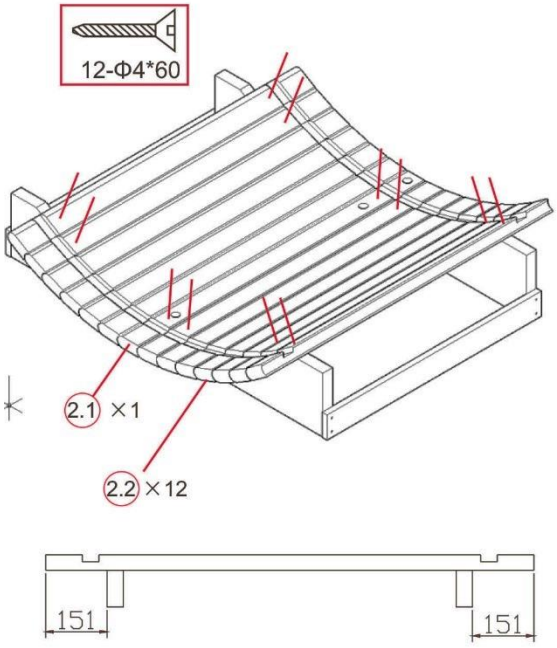

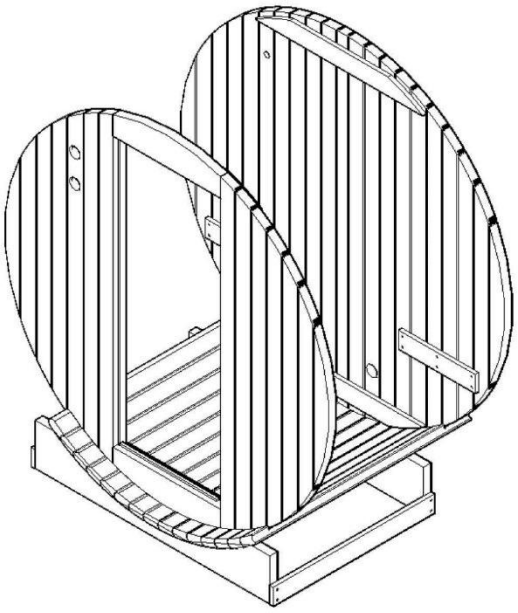

Step 5: Mounting the outer wall

- Place the next 32x wooden slats **2.2** with the groove in the front and rear wall, evenly, flush and close together and screw them together as shown.

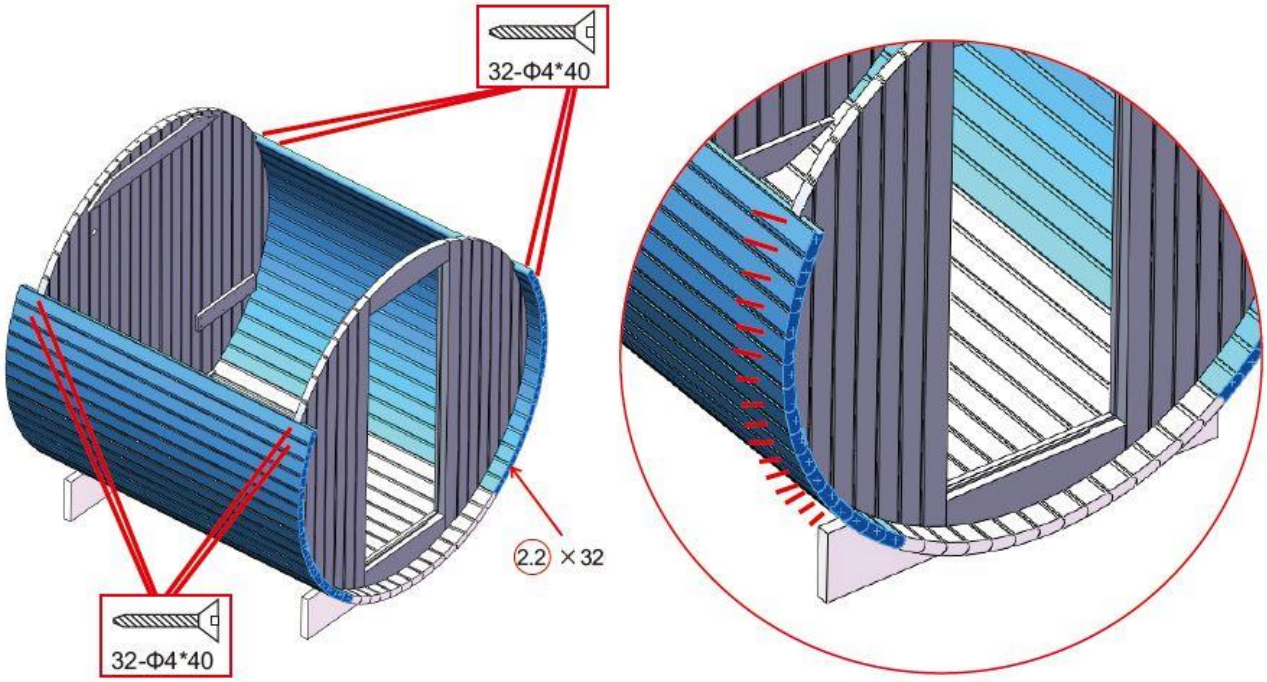

Step 6: Mounting the outer wall

- Place the next 17x wooden slats **2.2** with the groove in the front and rear wall, evenly, flush and close together, as shown below.

  Note: Wood is a natural material that is exposed to environmental influences, so changes may occur. If the gap between the wooden slats **2.3** & **2.4** is too large, the wooden slats **2.5** can also be used. Normally, the wooden slats are only a reservation.

- Place the wooden slats **2.3, 2.4 & 2.5** (see below) at the top centre with the groove in the front and rear walls.

  Tip: To pre-tension the sauna, we recommend commercially available tensioning straps, which are more flexible and can pre-tension the product more strongly.

  Note: Please note that before fitting the metal tensioning straps, the previously fitted screws connecting the outer wall to the back and front walls must be removed.

- Place 2x metal clamps around the product, the protection must be placed under the joint, insert the screws through the holes and screw on the nuts. Then tighten the metal clamps with a suitable tool. Finally, place the caps on the thread.
  (If tensioning straps are used, these can now be removed again)

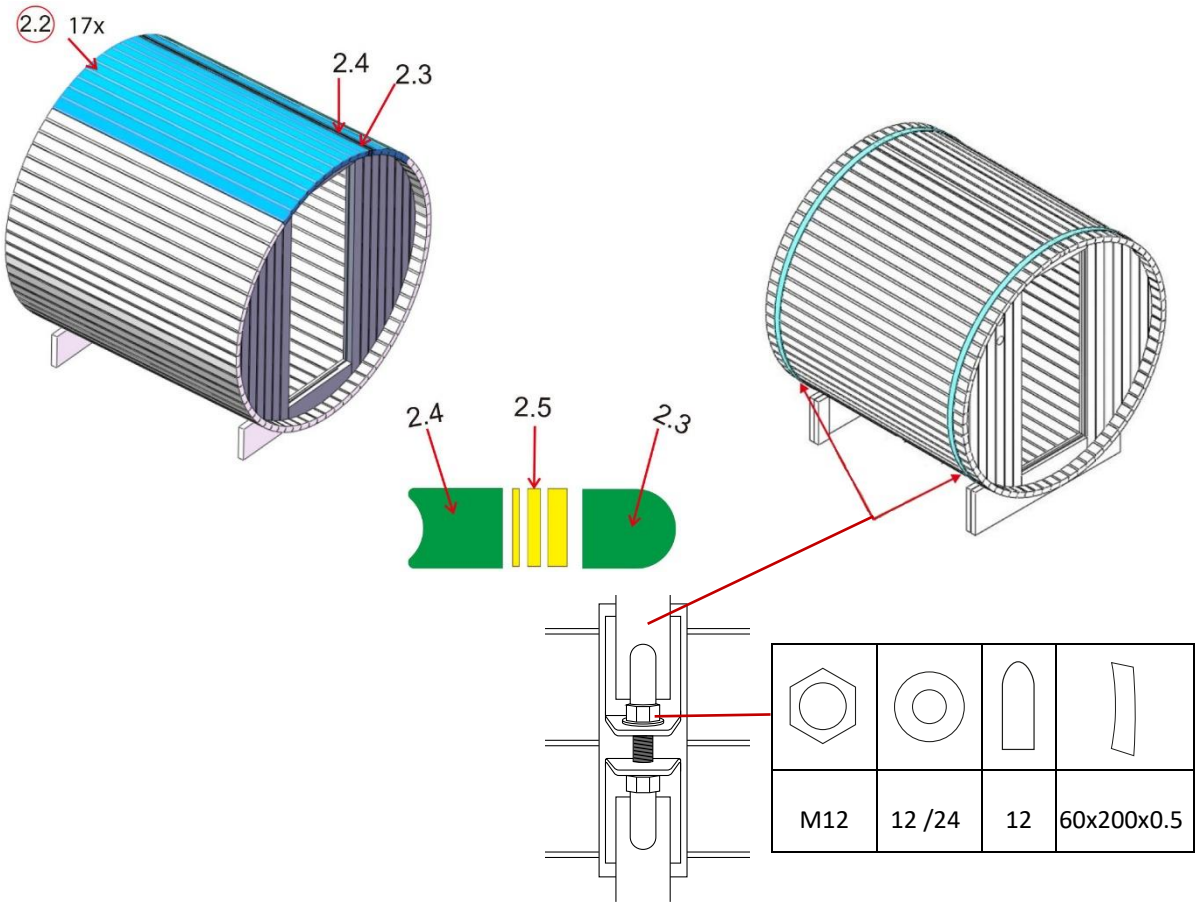

Step 7: Installing the floor

- Screw 3x wooden strut **6.2** to the floor **6.1** from below.
- Place the floor with the wooden struts facing downwards into the product and level it horizontally (e.g. using a spirit level).

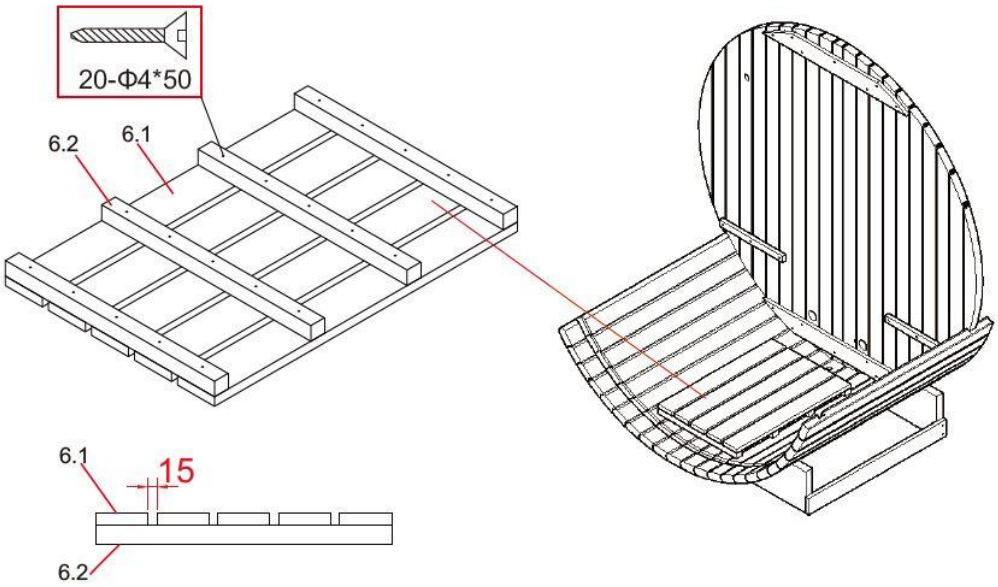

Step 8: Assembling the benches and sauna heater

- Fit the seat bench mounts **5.2, 5.3.**
- Place the benches **5.1** on the supports.
- Mount the oven holder, making sure that it is aligned vertically
- Slide the sauna heater into the heater holder from above.
- The wall behind the heater must not be covered with materials such as asbestos or Eternit panels etc., as this type of covering protection can cause high temperatures and the risk of burns.
- Use qualified materials for the ceilings and walls.

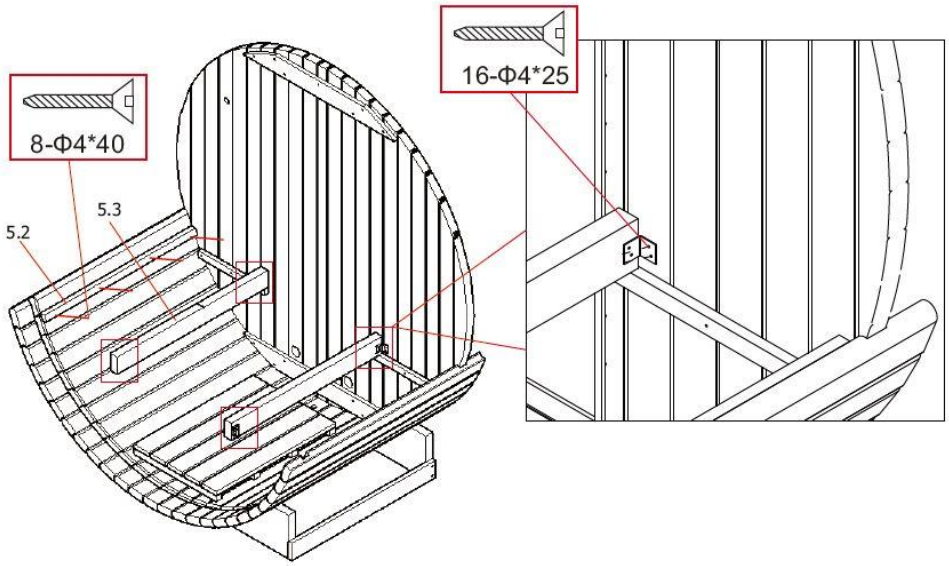

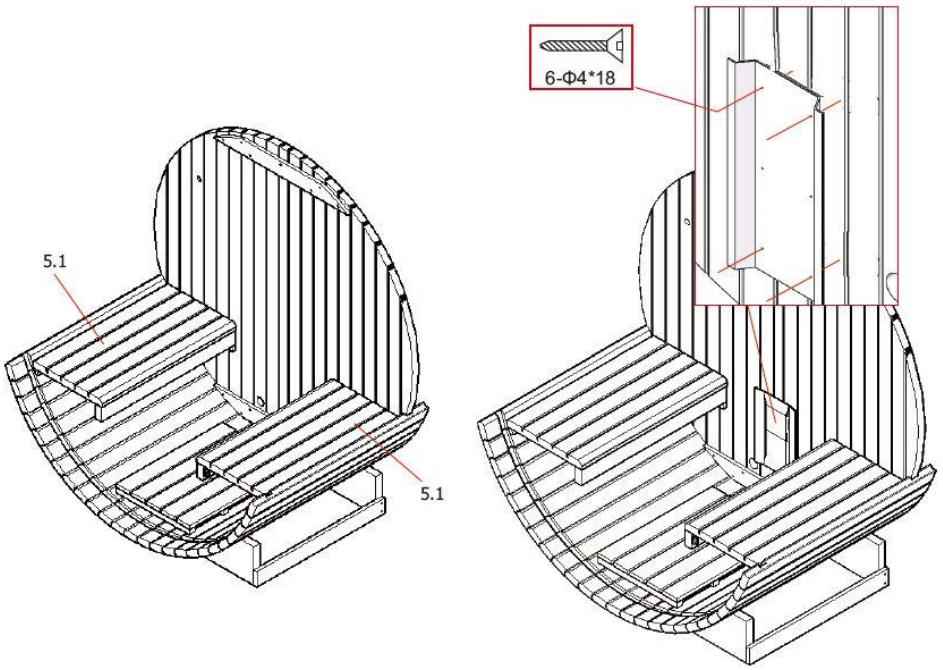

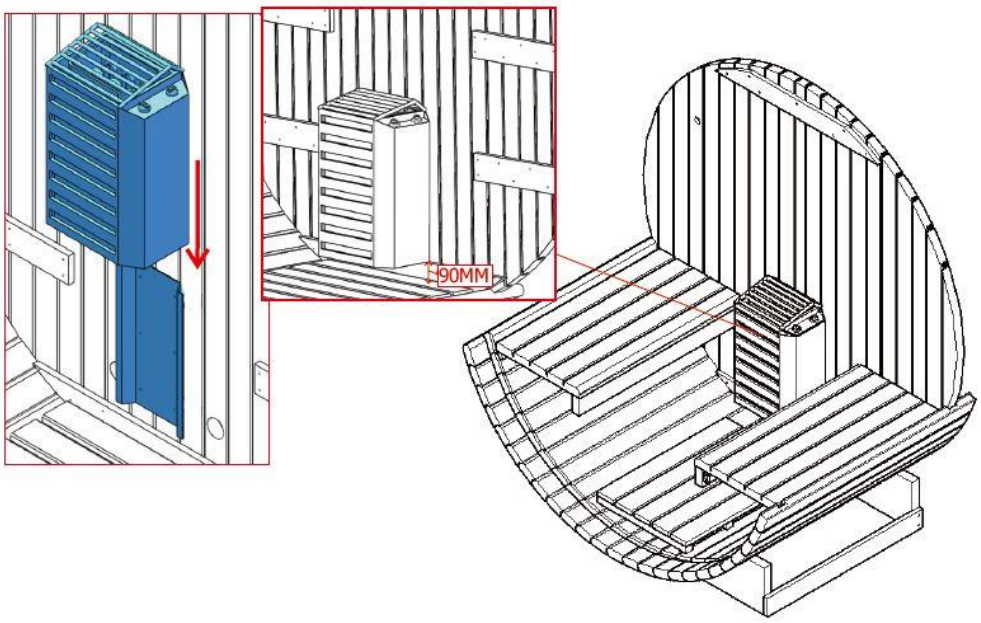

Attention: The sauna heater **must** be installed at a distance of 90 mm from the floor on the rear wall

Step 9: Mounting the protective grille and electrical connection of the sauna heater

- Connect the sauna heater to the power supply. The electrical connection of the sauna heater may **only** be carried out by a qualified electrician, taking into account the current, valid electrical safety regulations (**see chapter "Sauna heater: Model JM"**).
- After the electrical connection, the protective grille can be fitted around the stove.
- Screw the components of the protective grille **7.1, 7.2 & 7.3** together.

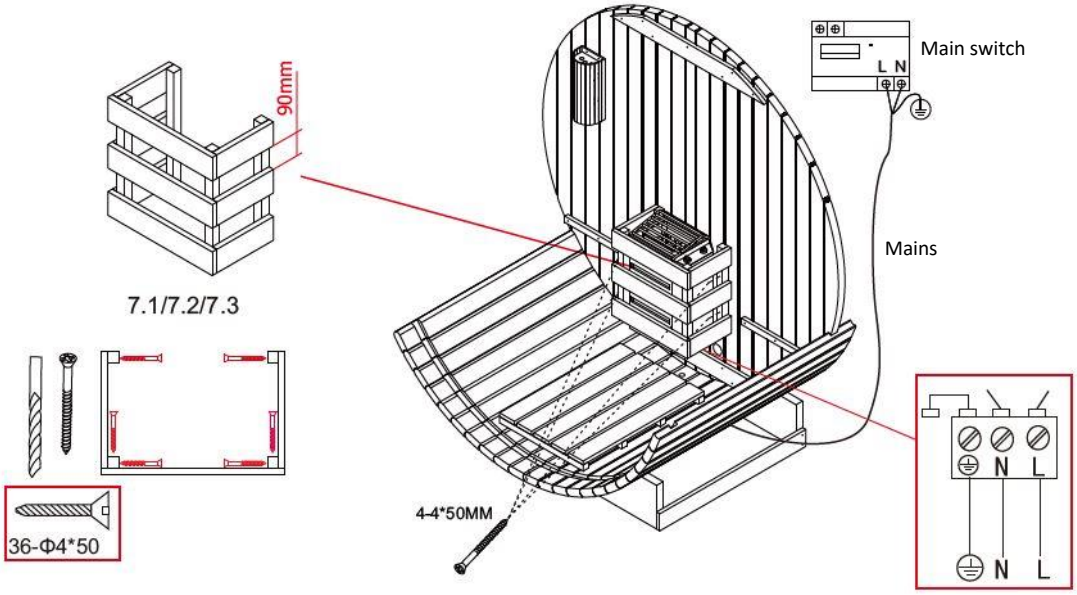

Step 10: Assembling the bench backrest and lamp

- Mount both backrests of the benches in the sauna using 6x screws each.
- Install the lamp in the sauna heater as shown below; this may only be carried out by a qualified electrician (**see chapter "Installation and electrical connection"**).

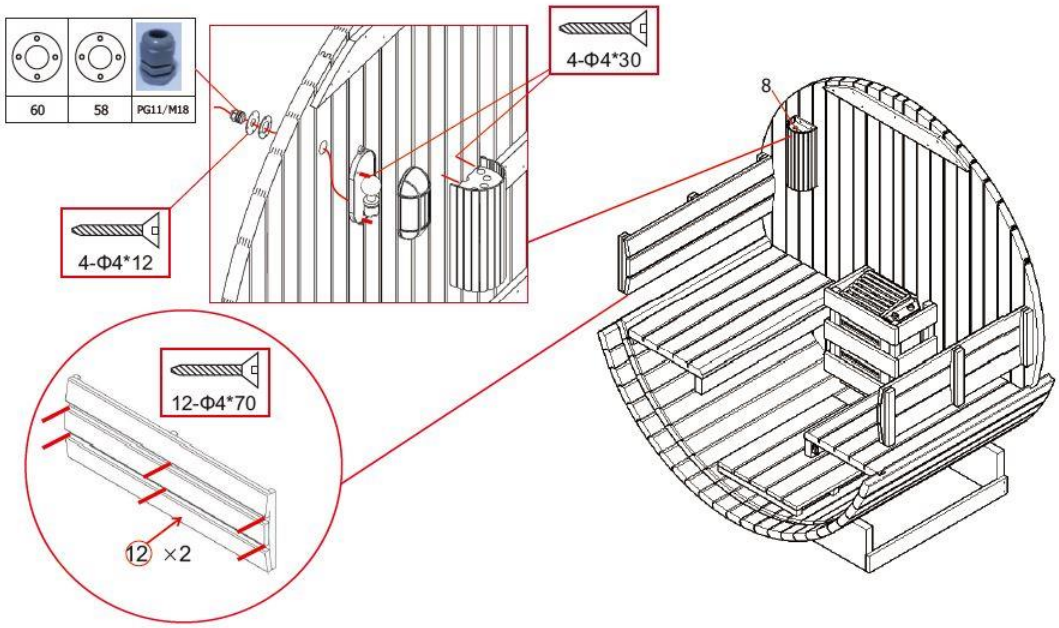

Step 11: Installing the vent and glass door

- Mount the timber **4.9** for opening and closing the ventilation from the inside on the front wall of the sauna.
- Mount the magnetic metal plate on the outside of the sauna front wall.
- Fit the handle **4.8** and the hinges to the glass door **4.7** as shown below.
- Hang the glass door in the front wall of the sauna with 2 people and fix the hinges.
- Mount 2x wooden slats **9** laterally, horizontally at a height of 1000 mm on the outside of the product.
- Position the insulating film over the product, free of bubbles and creases and flush with the wooden slat **9**. Any excess film can be removed with a cutter knife.

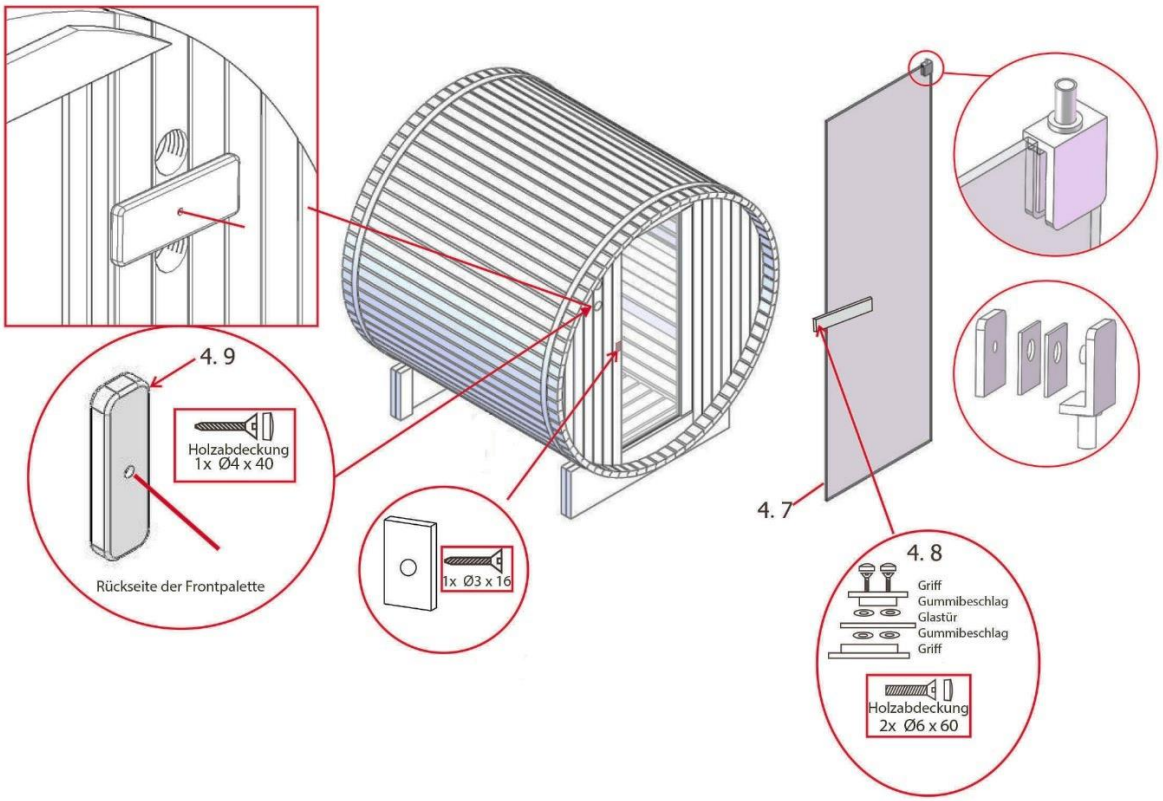

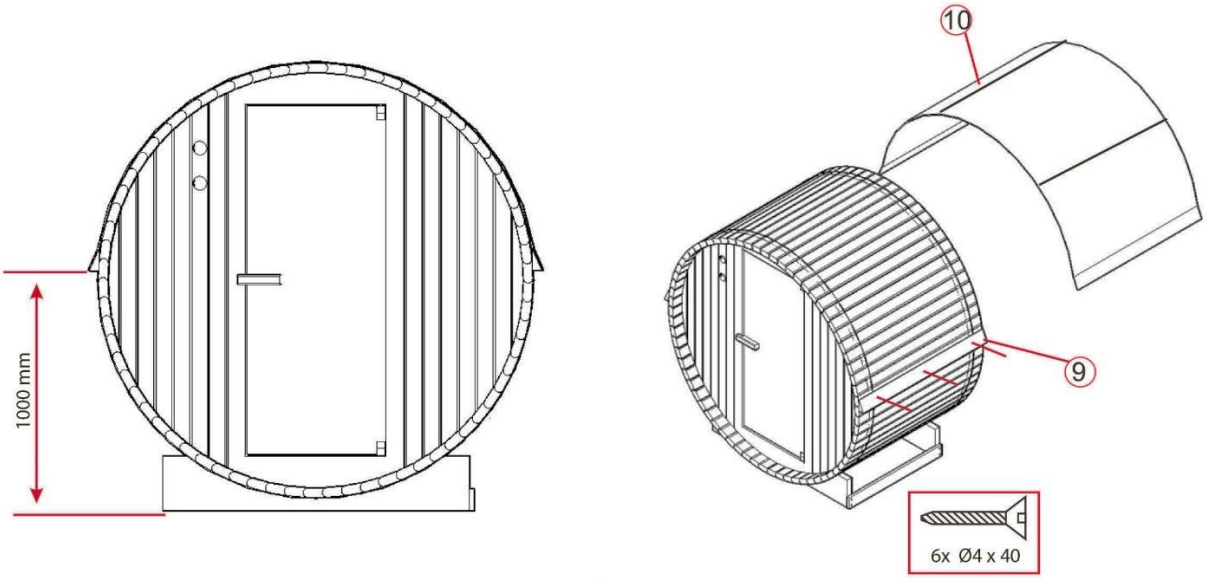

Step 12: Fitting the roof foil

- First unpack the roof foil completely.
- Spread the roof foil on the roof.
- Spread the foil firmly at the end so that no bubbles form.
- Make sure that the black layer is on the outside.
- **Note:** First peel off one side of the foil and stick the foil to the roof. Once this step is complete, the outer film can be removed and the roof shingles can then be fitted.









Step 13: Laying the shingles:

- When laying the shingles, start from both sides of the sauna roof so that they meet in the centre.
- Attach the first shingles to the wooden batten **9** so that the triangles protrude slightly.
- The best way to attach the shingles is with a staple gun.
- The next row of shingles must overlap a little.
- Repeat these steps for the remaining shingles. Protruding shingles can be removed with a cutter knife.

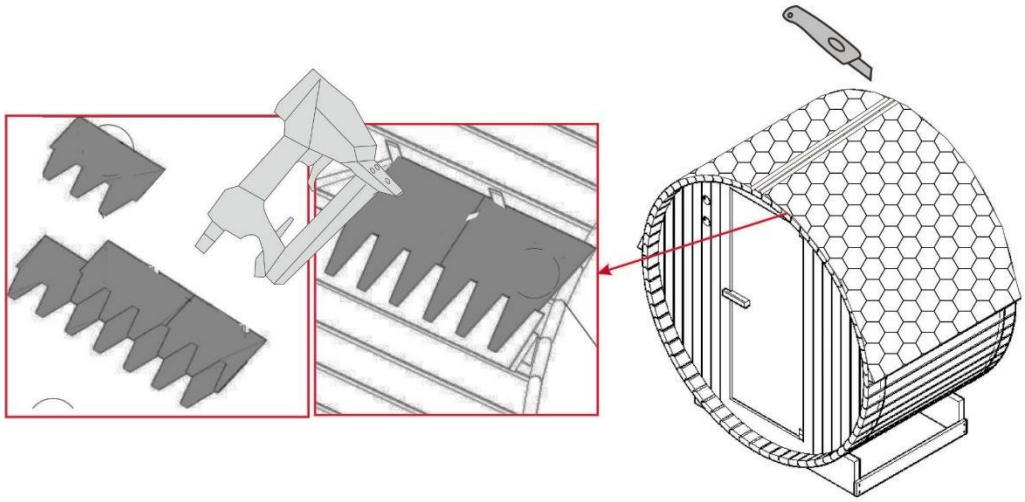

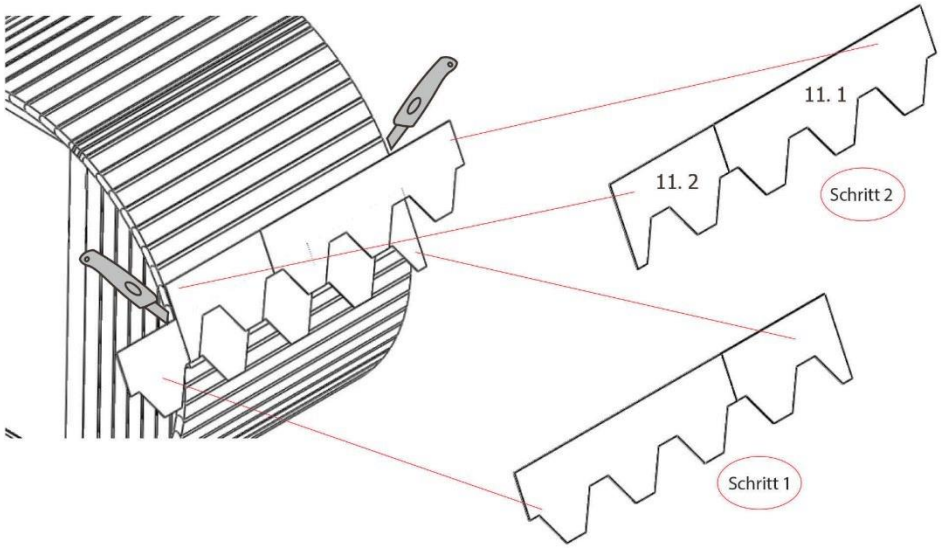

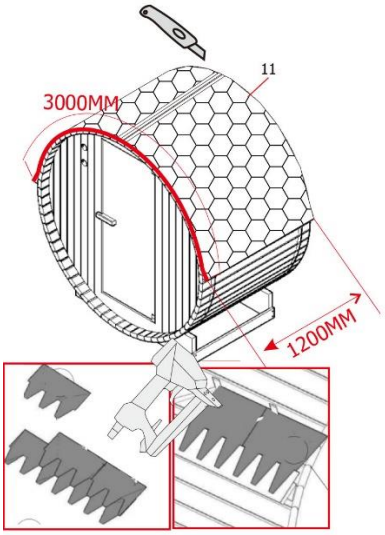

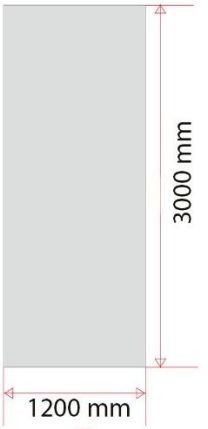

1

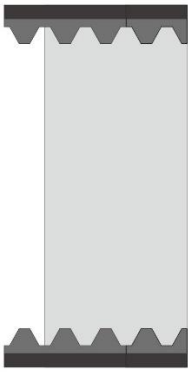

2 4 Stück



3 8 Stück

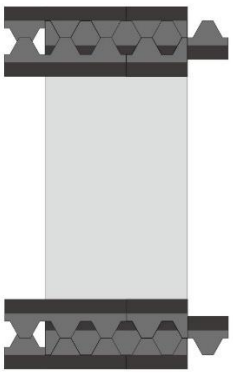

4 12 Stück

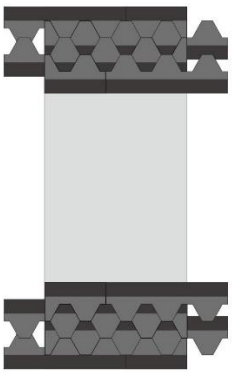

5 16 Stück

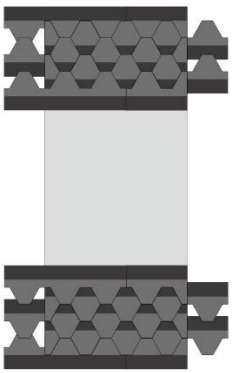

6 20 Stück

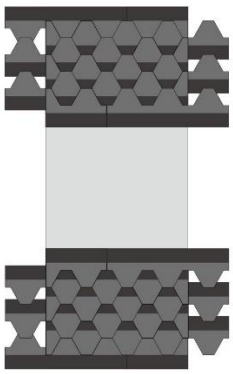

7 24 Stück

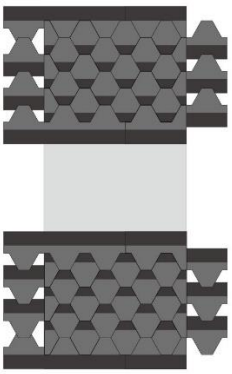

8 28 Stück

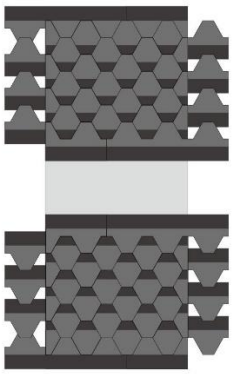

9 32 Stück

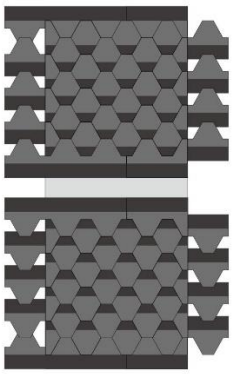

10 36 Stück

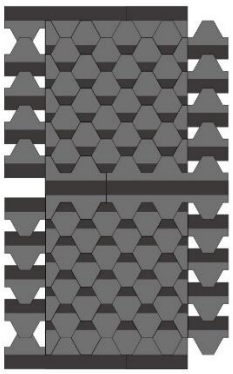

11 40 Stück

4.3. Sauna heater: Model JM

General information

The instructions refer to the sauna heater. It contains important information on installation, operation and use. Read the instructions, especially the safety and operating instructions, carefully before installing and operating the sauna heater and keep them in a safe place. Only use the sauna heater as described in these instructions to prevent accidental injury or damage. If the sauna heater is passed on to a third party, these instructions must also be handed over.



4.4. Safety instructions

Risk of injury

Improper handling of the sauna heater can lead to injuries.



- **Only** install the sauna heater if the scope of delivery is complete and undamaged.
- Risk of electric shock: Installation and maintenance work on the sauna heater **must be** carried out by a qualified electrician.
- **Danger to life due to electrical voltage**: There is an immediate danger to life if live parts are touched. Damage to the insulation or individual components can be life-threatening. -> If the insulation is damaged, switch off the power supply immediately and arrange for repairs.
- Make sure that the sauna heater is switched off after use and that the timer is set exactly to "**0**".
- **Do not** over-turn the timer dial, as this may result in the sauna heater not switching off and continuing to run without a time limit.
- Do not throw sauna stones.
- Do not place the sauna stones between the heating elements.
- Avoid direct pressure on the heating elements when stacking the sauna stones.
- Place the large sauna stones at the bottom when filling the sauna. Make sure that they are not placed too close together so that the air can still circulate.
- Remove broken or damaged stones from the sauna heater.
- Do not place too many sauna stones on the sauna heater.
- Do not place any objects on the sauna stones, the ventilation of the product must be guaranteed.
- Excessive moisture can cause electrical appliances to malfunction.
- Do not pour too much water onto the sauna stones as this can lead to excessively hot water vapour.
- A heat-resistant container must be placed underneath the sauna heater to contain any water that escapes.

4.5. Installation and electrical connection

Caution: Read the instructions for use completely and carefully before use.

- **Only** install your sauna heater if the scope of delivery is complete and undamaged.
- Make sure that all components are undamaged.

Hint

To avoid a short circuit or tripping of the RCD plug, we strongly recommend that you connect the product to a separately fused circuit. An overload can occur if several electrical appliances are operated simultaneously on the same line or if an extension lead is used. Please observe this recommendation when installing your whirlpool, sauna or infrared cabin. Further information can be found in the installation instructions and the technical data.

Installation and electrical connection of the sauna heater

Install the sauna heater on the wall at the specified minimum safety distances and volume using the fastening material supplied with the heater.

- The electrical connection of the sauna heater may **only be** carried out by a qualified electrician, taking into account the current, valid electrical safety regulations.
- Each sauna **must** be connected to its own power circuit. Therefore, do not connect any other electronic devices to the socket.
- The stove can be installed on the rear wall at a minimum height of 90 mm.
- The wall behind the heater must not be covered with materials such as asbestos or Eternit panels etc., as this type of cover protection can cause high temperatures and a risk of burns.
- Use qualified materials for the ceilings and walls.
- The sauna pipes must be connected to a wall-mounted junction box. The junction box should be splash-proof. The junction box must be splash-proof and must not be installed higher than 500 mm above the floor.
- The power supply cable must be made of REWE rubber-insulated cable or at least an equivalent cable.

Wiring diagram

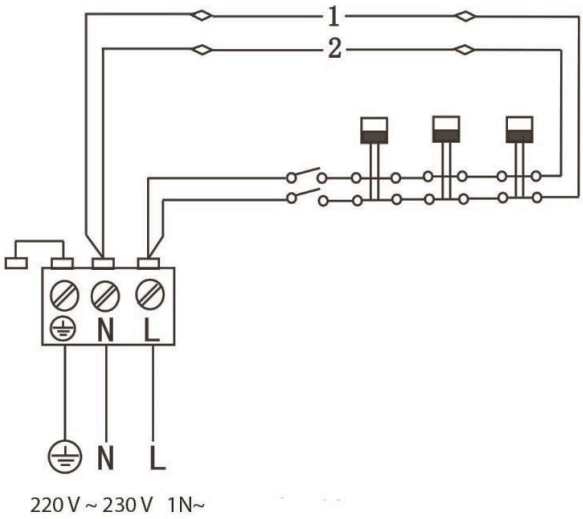

L:	Connection of the phases
N:	Neutral conductor
⏚	Earthing connection

Protective grille

The minimum clearances must be observed when installing the protective grille on the sauna heater.

Connecting lamps

The sauna lamps can also be connected in the junction box. These can use the same cross-section of connection cable as the sauna heater.

Caution: The screws must be firmly tightened and the minimum distance between the screw head and the wall must be 3 mm.

Sauna heater installation

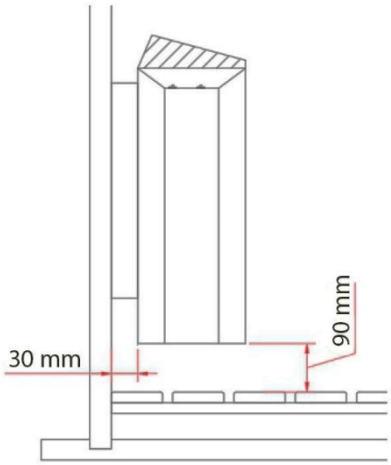

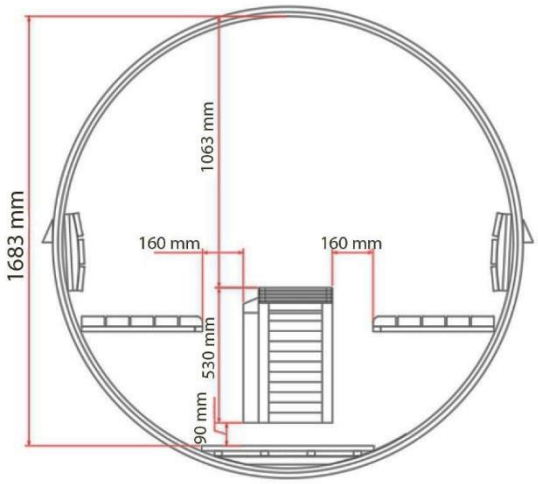

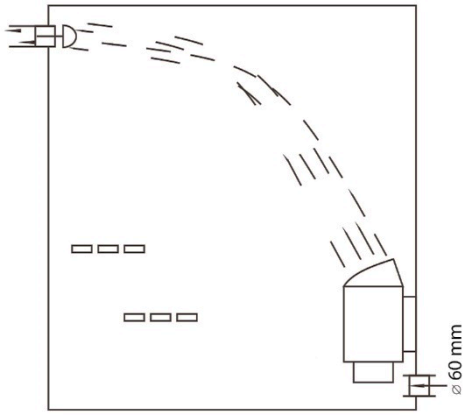

Model	Performance	Cable for
FK-36	KW	220 V 1 ph 240 V 1 ph mm^2
	3.6	3 x 2.5

Note:
The cables must be fused with **20 amps**.

5. Application

5.1. Safety instructions

The following health and safety information must be read carefully.

Risk of injury

Improper handling during operation can lead to injuries



- No changes may be made to the product.
- Before switching on the heater, make sure that no objects are stacked on top of the product and that they are at a safe distance.
- Check and make sure that the timer is set to "**0**" when you leave the sauna.
- **Do not** over-turn the timer dial, as this may result in the sauna heater not switching off and continuing to run without a time limit.
- Children aged 6 and over may only use the sauna under adult supervision.
- During commissioning, the product **must** be under constant supervision.
- **Risk of burns:** Keep away from heated and hot surfaces. The sauna heater, sauna stones and metal objects must not be touched during heating and sauna sessions.
- **Risk of scalding:** Keep at least 30 cm away from the hot, heated sauna heater.
- **Risk of scalding:** Do not pour water onto the sauna stones when someone is in the immediate vicinity of the sauna heater. The hot water can splash onto the sauna user and injure them.
- **Risk of slipping:** Watch out for slippery floors when entering the sauna**.**
- Do not pour too much water onto the sauna stones as this can lead to excessively hot water vapour.
- A sauna session can cause medical problems for sauna users. The following groups of people should consult a doctor beforehand:
  Pregnant women, heart disease, high blood pressure, circulatory problems, after taking medication, with diabetes, when feeling unwell
- A sauna session should not last longer than half an hour. A sauna session that lasts too long can lead to a rapid heartbeat, slight heart pain, a feeling of weakness or dizziness. If the above symptoms occur, the sauna session should be ended immediately.
- If you stay in a hot sauna for a long time, the blood temperature can rise, which can have a negative effect on the body.
- Do not go into a hot sauna if you have just been drinking.
- Do not sleep in the hot sauna.
- Do not store bottles of infusion agent in the sauna.
- Drink some fluids after the sauna.
- Keep your skin cool when needed.
- **We would like to point out that Home Deluxe GmbH does not assume any costs for installation or manual services - such as electrician costs or comparable specialist costs.**

Risk of damage



- Before each use and at regular intervals, check all fastenings of the product for visible damage. Pay particular attention to load-bearing components. In the event of material changes or damage, take the product out of operation. Contact the manufacturer's customer service for further instructions and, if necessary, spare parts.
- Do not force the sauna stones between the heating elements.
- The sauna stones do not have to fit and be placed completely between the heating elements.
- Check the fastening screws, metal tensioners etc. at regular intervals and tighten them if necessary.
- Do not use the product to dry laundry.

5.2. Initial commissioning

The sauna heater and the sauna stones give off odours when they are first used; ventilate the sauna cabin after heating up so that air can be exchanged. When heating up for the first time, no persons should be in the sauna cabin.

5.3. Operation

Attention!

Please check with the fire protection authorities about the use of firewalls and insulation. The ventilation openings must not be insulated.

- The sauna offers space for a maximum of 2 people.
- The sauna heater is equipped with a timer and a temperature control, where the time and temperature can be set and controlled. The sauna heater can be switched off by setting the timer to "**0**".
- Sufficient air circulation is essential for a sauna session. The air in the cabin should be renewed 6 times an hour. Correctly installed ventilation creates pleasant sauna conditions and also saves energy.
- To maintain the temperature during the sauna session, the ventilation must be closed.
- The ventilation openings must not be blocked during operation.
- After the sauna session, open the ventilation and also the sauna door so that the sauna dries out.
- Only use drinking water for the infusion. Other water or liquids can damage the heating elements and invalidate the warranty.
- Do not use too much water for the infusion, as this can lead to excessive hot water vapour.
- The function of the sauna heater is to bring the temperature of the sauna cabin to a suitable and comfortable temperature. The temperature is brought to a suitable temperature of around + 65 °C in about an hour.

5.4. Control elements

Temperature control

Depending on the size of the sauna cabin, the sauna heater can reach the preset temperature in 30 to 60 minutes, which can be regulated by the thermostat to a temperature that is comfortable for you. A thermostat with a three-phase connection can ensure that a comfortable temperature is maintained in the sauna cabin. The temperature is set using the rotary control.

max.

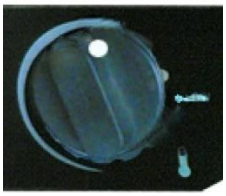

min.

Timer

The timer is the "off switch" for the sauna heater, which must be set exactly to "**0**" to switch it off. The heating time is set using the control dial.



Time span	**0 = Off**
	1 = 30 min
	2 = 60 min
	3 = 90 min
	4 = 120 min
	5 = 150 min
	6 = 180 min

5.5. Sauna stones and sauna infusion

Information about the sauna stones

- **Recommendation:** Clean the sauna stones of dust before using them for the first time and then place them in a stack in the sauna heater.
- Place the large sauna stones at the bottom of the sauna heater. Make sure that they are not stacked too tightly so that the air can still circulate.
- The sauna stones must be of the best quality. Use a solid sauna stone that is especially suitable for use in electric sauna heaters.
- Place sufficient sauna stones (10 - 15 kg) in the sauna heater, but only after the installation of the sauna heater and the control box has been completed.
- The diameter of the sauna stones is usually 5 to 25 cm.
- The sauna stones should be made of a solid volcanic rock, such as peridot.
- Do not use loose or porous ceramic stones, as these can cause damage to the sauna and the sauna heater at high temperatures.
- Do not place sauna stones directly on the heating elements.
- Do not pile the sauna stones into a high stack.
- There must be no objects or devices in the stone chamber or in the vicinity of the sauna heater that could change the volume or direction of the air flow through the sauna heater.

Sauna infusion

- When the sauna cabin heats up or warms up, the air becomes dry. An infusion with an appropriate amount of water on the hot sauna stones brings the humidity to the right level and the skin feels the effects of the increased moisture.
- The right level of moisture gives the skin natural perspiration and gentle breathing.
- Too high a temperature and humidity can lead to an uncomfortable feeling.
- A longer stay in the sauna cabin can lead to an increase in body temperature. The sauna user should feel comfortable
- When infusing, the capacity of the wooden ladle should **not** exceed 200 ml.
- Only tap water / drinking water should be used for the infusion.
- Only fragrances labelled for this purpose may be used for the infusion. Follow the instructions on the pack.

Water property	Effect	Recommendation
Humus content	Colour, taste, deposits	<12 mg/l
Iron content	Colour, odour, taste, deposits	<0.2 mg/l
Water hardness: The most important substances are: Manganese (Mn) and lime, i.e. calcium (Ca).	Deposits	Mn: <0.05 mg/l Ca: <100 mg/l
Chlorinated water	Harmful to health	Must not be used
Salt water	Rapid corrosion	Must not be used

5.6. Sauna recommendations

Sauna instructions

- Cleanse your body before the sauna.
- Only stay in the sauna as long as it is pleasant.
- Forget all the stress and relax.
- Coordinate the infusions with the other users.
- The heated skin should cool down in the meantime, if possible go for a swim in a cool pool or take a cold shower.
- Wash yourself after the sauna.
- Rest until you feel balanced.
- It is best to drink clear water or a soft drink to stabilise your fluid balance.

Hygiene in the sauna cabin

- Use towels to protect against sweat on the benches.
- Clean the benches, sauna walls and sauna floor at least every six months. Use a sauna cleaning agent and a brush for this.
- Wipe off dust and dirt from the sauna heater with a damp cloth.
- Remove limescale deposits from the oven with 10 % citric acid.

6. Troubleshooting

If faults occur during operation of the product, please check the following causes of faults using the table below. If the fault cannot be rectified, please contact customer service:

Error	Possible cause	Solution
The sauna wobbles or swings	• The sauna stands on an uneven, loose surface	• Place the sauna on a level, solid surface
Heat escapes from the sauna	• Metal clamps have come loose	• Tighten the metal tensioner
The sauna heater cannot be switched on	• No mains voltage	• Check the fuse or RCD of the power supply • Main switch of the power supply is off
The sauna heater does not switch off	• The timer is not set exactly to "**0**" • The timer has been turned past the 0 position	• Set the timer exactly to "**0**" • Set the timer exactly to "**0**"
The sauna heater is not working properly	• Overheating protection has triggered • Thermostat not set correctly • Timer is set to "**0**"	• Contact customer service • Set the temperature correctly • Set timer to on
The sauna heater does not heat up properly	• Heating elements are not in order • Temperature does not rise • Sauna stones too close together • Ventilation closed	• Check the heating elements • Increase temperature • Re-stack the sauna stones so that the air can circulate • Open the ventilation
The sauna heater heats up quickly, the sauna stones do not get really warm. Water runs off behind the sauna stones.	• Ventilation closed • Thermostat regulates the temperature down • The heat output is too high	• Open the ventilation • Contact customer service • Contact customer service
Noises from the sauna	• Sauna stones and sauna components can make noises when heating up or cooling down. • Timer ticks loudly	• No error • No error

7. Maintenance and care

- High humidity in the sauna cabin does not damage the wood.
- The sauna cabin must be well ventilated after the sauna session and an appropriate drying phase should be observed.
- Spray the wood (walls and benches) in the sauna cabin with water.
- Wipe wooden surfaces with a damp cloth.
- Depending on use, treat the seating surfaces with fine sandpaper at least once a year.
- Some of the sauna stones break naturally during use. Refill the sauna heater with new sauna stones.
- Some of the sauna stones break naturally during use. Replace the sauna stones with new ones.
- Remove the sauna stones at least once a year and reposition them. Remove the dust and small stones. This makes the sauna more efficient and prevents overheating problems.



Disinfectants are highly corrosive!
Follow the instructions of the detergent or disinfectant manufacturer.
Wear protective gloves when cleaning.

- We recommend glazing the exterior sauna walls with a commercially available wood stain after installation. Check the glaze annually and repair any defective areas.



Attention! The inside of the sauna cabin must **not** be painted, varnished or impregnated. Wooden parts (e.g. benches, protective grilles, etc.) used inside the sauna cabin must also not be painted, varnished or impregnated. These surfaces develop toxic gases when heated.

8. Dismantling

8.1. Safety instructions

Risk of injury
Improper handling during disassembly can lead to injuries



- Disconnect the product from the power supply before dismantling. Contact with live components can result in an electric shock, which can cause burns or death.
- The product has a high weight and large dimensions, at least 4 people are required for disassembly.
- Secure the product against falling before dismantling.

Disassembly of the product must be carried out in reverse order to assembly. (**see chapter Assembly**)

9. Disposal instructions

9.1. General information



- Dispose of the product and all components in accordance with local and country-specific regulations, thereby avoiding damage to the environment.
- Our packaging is made from environmentally friendly materials. These can be recycled and thus serve as valuable raw materials. Dispose of the packaging material (cardboard, dirty packaging, etc.) separately and professionally in accordance with the applicable national regulations.
- Contact the manufacturer if you are unsure about disposal.
- You can also obtain information on proper disposal from the local waste disposal centres.

10. Electrical and electronic equipment - Information for private households

The Electrical and Electronic Equipment Act (ElektroG) contains a large number of requirements for the handling of electrical and electronic equipment. The most important ones are summarised here.

1. Separate collection of old appliances

Electrical and electronic appliances that have become waste are referred to as old appliances. Owners of old appliances must dispose of them separately from unsorted municipal waste. They must separate used batteries and accumulators that are not enclosed in the old appliance, as well as lamps that can be removed from the old appliance without destroying them, from the old appliance without destroying them before handing them in at a collection point. Separate old appliances in order to prepare them for reuse.

2. Options for returning old appliances

Owners of old appliances from private households can hand them in at the collection points of the public waste disposal authorities or at the take-back centres set up by manufacturers or distributors in accordance with the ElektroG. An online list of collection and take-back centres can be found on the website: https://www.stiftung-ear.de or https://www.take-e-back.de.

3. Data protection notice

Old devices often contain sensitive personal data. This applies in particular to information and telecommunications technology devices such as computers and smartphones. In your own interest, please note that each end user is responsible for deleting the data on the old devices to be disposed of.

4. Take-back obligation of distributors

Distributors with a sales area for electrical and electronic equipment of at least 400 $m^2$and distributors of foodstuffs with a total sales area of at least 800 m^2who offer electrical and electronic equipment and make it available on the market several times a calendar year or on a permanent basis are obliged to do so,

- when supplying a new electrical or electronic appliance to an end user, to take back free of charge at the place of supply or in the immediate vicinity an old appliance of the end user of the same type that essentially fulfils the same functions as the new appliance, and
- at the end user's request, to take back old appliances that do not exceed 25 cm in any external dimension free of charge in a retail shop or in the immediate vicinity thereof; the take-back may not be linked to the purchase of an electrical or electronic appliance and is limited to three old appliances per type of appliance.

5. Meaning of the "crossed-out wheelie bin" symbol



The symbol of a crossed-out dustbin regularly shown on electrical and electronic appliances indicates that the appliance in question must be collected separately from unsorted municipal waste at the end of its service life.

- Manufacturer registration number
- We are registered as a manufacturer within the meaning of the ElektroG with the responsible foundation Elektro-Altgeräte Register (Nordostpark 72, 90411 Nuremberg) under the following registration number: WEEE-Reg. No. DE86467979

Home Deluxe GmbH
Schanzeweg 2
32312 Lübbecke
Germany
Tel: +49 (0)5743 6181-0
www.home-deluxe-gmbh.de

GA-011-03-LAHTI_M
2023/05